Smaller May Be Better, but It’s Not Always Easy

Medical OEMs face a number of challenges in miniaturizing device designs. Fortunately, new electronic capabilities and technologies are enabling this process to be performed more efficiently. This article will explore issues medical device manufacturers face when they attempt to reduce the sizes of their products and the innovations available to help them.

By Peter Cleaveland, West Coast Editor
The benefits of reducing the size of medical equipment are plain. In the field, smaller devices allow heavily-burdened EMTs to do a better job. In the operating room, smaller equipment gives more elbow room. Equipment carts rolled from room to room can hold more, or themselves be smaller, if the equipment they carry is smaller. And reducing the size of an implanted device is always desirable. But shrinking things isn't always easy, and can present a medical OEM with numerous challenges.

Challenges

One of the first challenges contract manufacturers face, says James Ohneck, director of sales and marketing at Valtronic Technologies (a company that specializes in the design and development of miniaturized systems) comes from misunderstanding the costs involved in miniaturizing a product. "A lot of times [our] customers have a set of expectations when they walk in the door about what miniaturizing something [involves]," he says. "Like it's smaller, it must be less expensive. That's not really the case."

Figure 1: These 8-bit microcontrollers are in 2 x 3 mm DFN packages.*(Photo: Microchip Technology)*

Adding to the cost is the fact that many medical devices are built in limited

quantities. "I think there's been a total of 100,000 cochlear implants implanted over the last 20 or 30 years," says Mike Faltis, vice president of auditory research & development, Advanced Bionics. "The quantities aren't very large, so it's very expensive to automate these things. They all have to be hand built, because you just can't make a business case for doing them any other way."Faltis cites a purely physical challenge: implanted devices must be hermetically sealed to survive in the corrosive environment of the body, but the smaller the package, the more difficult it can be to seal it. Hermeticity depends on the integrity of the seal, often fritted ceramic or glass. For viability, "you have to make that as long as possible," he explains, "So when you miniaturize hermetic technology, it becomes more and more challenging."

Availability of Components

Also adding to cost is difficulty in obtaining components. Without room for standard IC packages, companies look to bare dice, but some parts aren't available in that form, and those that are may be more expensive than packaged parts. "A lot of times to get the components in the bare die form, you have to pay more money," says Ohneck, "and the lead times are longer." The reason, he explains, is that some semiconductor plants are set up to move product in a steady flow from wafer to packaged parts "so when you ask them to take a wafer off of that, it disrupts their flow."

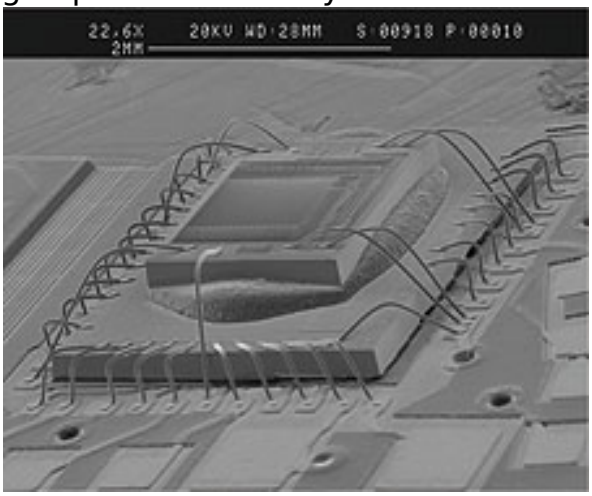

Figure 2: Wirebond assembly allows for inspection, unlike flip chips.*(Photo: Valtronic)*

What to do? Pay the extra cost and endure the longer lead items? Design around the problem, going to a slightly larger end product if necessary? As another option, do what Advanced Bionics does they make their own. "We're building almost all of our chips now," says Faltis, " . . . and they're completely custom chips."

Not all IC makers have a problem with supplying bare dice, says Steve Kennelly, senior manager of Microchip Technology's Medical Products Group, who says that his company has a number of fairly large customers that buy their ICs in bare-die form. While not all IC buyers fall into the "big user" category, some chip makers have packaged parts that aren't much bigger than bare dice. Microchip Technology,

says Kennelly, has a line of 8-bit microcontrollers in 2 x 3 mm DFN packages (Figure 1), "and we've got … analog functions, so you've got A/Ds on these 8-bit micros."

Figure 3:
constructi
to make t
interconne
retain the
the circuit
mounting.
Products)

Another question is how to mount the dice. Flip chips look attractive, but are difficult to inspect after mounting, may be subject to delayed failure, and are difficult to rework. All this makes wirebond a more attractive choice in many cases. Figure 2 shows how small a wire bonded assembly can be.

PC Boards

Small devices are useless if they can't be mounted to a PC board. "We can make things smaller," says Ohneck, "we can make the traces smaller, but the PC board manufacturers can't make the PC board reliably beyond a certain point." A wire bonder, for example, can hit a very narrow pitch, he explains, "but it doesn't matter because the PC board can't make a pitch narrow enough to keep up with the wire bonder."

Fortunately some new technology may help solve this problem.

Advances in copper technology are making for better and thinner flexible circuits, with 1-mil (25 micron) substrates bonded to very thin copper, says Merle Tingelstad, market intelligence analyst, Minco Products. While rolled annealed copper can be problematic in weights below 1/2 oz, he says, recent advances in electrodeposition are making for very thin and flexible copper with good reliability. And, adds Ohneck, there's a new technology for laying down copper that resembles ink-jet printing. "That technology will enable the PC board manufacturers to more quickly turn out precision PC boards where the traces are physically able to be closer together," he

says. "Then we can start really pushing the limitations of what we do faster."

Figure 4: Som
use slower clo
smaller duty c
cochlear impla
has to process
signals continu
much power, i
implant itself i
inductively by
outside.*(Photo
Bionics)*

Another useful technique, says Tingelstad, is rigid flex construction (Figure 3). "You can make that fold and interconnect the layers with just the flexible portion, and they'll retain the hard board part of the circuit."

Batteries and Power Sources

A major roadblock on the way to smaller products is often the power source, even for line-powered equipment. Often, says Dennis Ver Mulm, vice president of marketing, PowerVar, there's a tendency to omit power conditioning from equipment that doesn't get near patients—an oversight that may not show up until after the system is out in the field. "All of a sudden, there's maybe an unacceptable failure rate of circuit boards or power supplies," he says, but by then it may be too late. "At that point," he continues, "there's generally precious little space inside the system any more to build power conditioning in there."

For battery-operated devices, the problem is that the power requirements generally don't shrink along with the package, and the battery may end up being larger than the device it powers.

RoHS Doesn't Apply to Medical Devices, but It's Still a Problem

Medical devices are, at least for now, exempt from RoHS requirements—so why are medical OEMs worried? Because many component manufacturers are phasing out non-RoHS parts. "About every six months," says Mike Faltis, "we'll get a component that's no longer made for RoHS reasons, and we'll have to requalify the whole thing."

> Jim Kreisel, director of global industry development at Watlow, says that many of his customers are receiving obsolescence notices on a daily basis from semiconductor manufacturers. "Now you have components that may not be available and you're going to have to deal with redesign," he says, "and if they have to deal with redesign, if it's a critical medical device, of course then they have FDA issues to deal with." What's more, he says, "you have to deal with different manufacturing techniques for a RoHS component."
>
> With non-RoHS parts disappearing, it might seem sensible to bite the bullet and go with the RoHS-compliant parts, but there are still questions about their reliability. "In the really high-rel like implantable pacemakers and so on," says Todd Schneider, "there's a strong reluctance for people to go there, because they don't believe it's reliable enough yet." AMI, he says, is taking a go-slow approach, doing reliability tests and checking for things like tin whiskers, which are single crystal, needle-like protrusions that grow from plated surfaces; they can grow to several millimeters in length and cause shorts between closely-spaced conductors. The kicker is, they can take years to form. Along with R&D work, AMI is launching RoHS-compliant products for applications like hearing aids, which are not life-critical, while continuing research. "Customers," he says, "are saying they want to move to lead-free because they need to in Europe and Japan."
>
> Microchip, says Steve Kennelly, is also doing R&D. "We've gone with a pure matte tin lead finish and then we take a number of steps to mitigate the possibility of whisker formation," he says, and have found some manufacturing processes that have shown very good results in the life testing.
>
> So the answer would seem to be, work closely with the parts supplier and learn all the ways there are to make RoHS-compliant parts work in finished products because, like it or not, they will soon be the only parts available.

Clearly, power consumption needs to be cut, but how? One approach to miniaturization can make the power problem worse. Going to ICs with smaller feature sizes 0.13 micron in place of 0.18 micron, for example greatly increases leakage and static power. "You need very low leakage processes," says Todd Schneider, vice president, diagnostics, therapy, and monitoring, Medical Business Unit, AMI Semiconductor, "low leakage design techniques, because these devices are quite complex now, and they sit there with a lot of circuitry in a standby mode for lots of the time."

This is one reason, says Schneider, that many medical OEMs opt for larger devices; "they'll stack four or five [dice] up on a larger geometry technology," he says. "The planar area is limited, of course, by the form factors that they like to use, but you can go vertical, just basically stack up."

Saving Power by Careful Design

For most devices, the major power drain is dynamic, so how is dynamic power saved? One would think that a simple way would be to slow everything down; the slower the clock, the fewer transitions per second and the less the power dissipation. But this can be misleading, says Schneider. "If you clock it slower, you're just stretching out the energy consumption."

Another way to save energy is to reduce the duty cycle; let the device spend most of its time in a low-power standby mode and wake up periodically. In this case, says Kennelly, "how fast it can wake up, how fast it can go to sleep, and how fast it can run while it's awake have a lot to do with what your total power consumption is over a span of several seconds."

Some devices can't use slower clock speeds or smaller duty cycles; the cochlear implant, for example, has to process high-bandwidth signals continuously; it uses so much power, in fact, that the implant itself is powered inductively by the part worn outside (Figure 4).

Omit Needless Functions

One way to reduce power consumption is to avoid ICs with more functions than needed for the application. In fact, says Schneider, "if you know exactly what you want to do, you could hard-code the whole thing in gates." And many implantable device makers, he says still do that. "The problem," he says "is that becomes a very brittle and inflexible design."

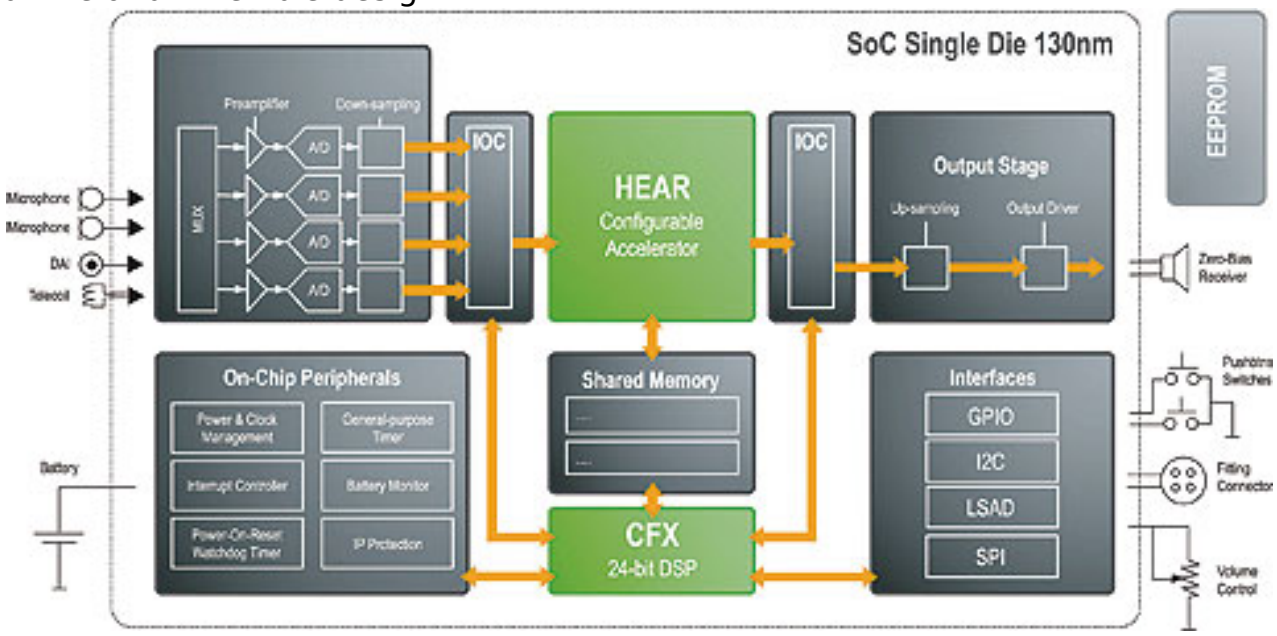

Figure 5: This chip for hearing aids includes a flexible filtering engine called the Hear accelerator. *(Picture: AMI Semiconductor)*

AMI's answer to that, at least for hearing aids, he says, was to develop a chip called Ezairo (Figure 5), "which has a very flexible filtering engine called the Hear accelerator."

It's possible to do similar things with implanted defibrillators. "What a defib needs to do is identify when it needs to apply a shock," says Schneider. "So you want a kind of pattern analysis and identification, if you will. So that's again a technique where you can bring flexibility but still achieve low power."

Figure 6: Watlow's Freeflex polymer heated tubing assemblies can heat moving fluids up to 212°F (100°C) or maintain temperatures as fluids move from a reservoir to the point-of-use. *(Photo: Watlow)*

Another way to save space is to combine functions that are usually done with separate components. An example is Watlow's Freeflex polymer heated tubing assemblies (Figure 6), which puts the heating element in direct contact with the tubing and is available with built-in temperature sensors.

Things to Keep in Mind

What should a medical device OEM keep in mind when he decides to start miniaturizing products? One of the first things, suggests Ohneck, is to become familiar, at least in general terms, with some of the design rules for the miniaturized circuit boards and miniaturized technologies. "A lot of engineers know the design rules for placing surface mount, but when they want to place a bare die onto chip-on-die or do flip chip, they're not familiar with the design rules," he says. "They're not familiar with the metalization on the board that's required to do these different processes." As a result, he continues, "they make an assumption [that] any PC board manufacturer can make a board for a chip on board, and that's not the case."

Tingelstad urges designers to pay attention to surface finishes and the locations of things like solder pads relative to bends in circuit boards. "As things get smaller the stresses can be transmitted into areas that they don't want them to transmit to and cause a fracture," he says. "If you have nickel over a very sharp bend it will fracture."

Perhaps the most general rule is to be cautious in following the curve of technological development: Leading edge things make progress; bleeding edge things often lead to failure.

References

Busch, Dave. "Is Your Supply Base Changing Without You?" [1] *Medical Design Technology*, February 2007, p. 22-26.
Finstad, Mark. "Designing with Flexible Circuits: Focus on Bending," [2] *Medical Design Technology*, February 2007, p. 31-32.
Online
For additional information on the technologies and products discussed in this article, visit the following websites:
www.advancedbionics.com [3]
www.amis.com [4]
www.microchip.com [5]
www.minco.com [6]
www.powervar.com [7]
www.valtronic.com [8]
www.watlow.com [9]

Source URL (retrieved on *12/20/2013 - 3:30am*):
http://www.mdtmag.com/articles/2007/10/smaller-may-be-better-it%E2%80%99s-not-always-easy?qt-recent_content=0

Links:
[1] http://www.mdtmag.com/scripts/ShowPR.asp?PUBCODE=046&ACCT=0007258&ISSUE=0702&RELTYPE=PR&PRODCODE=2755&PRODLETT=A
[2] http://www.mdtmag.com/scripts/ShowPR.asp?PUBCODE=046&ACCT=0002444&ISSUE=0702&RELTYPE=PR&PRODCODE=0690&PRODLETT=A
[3] http://www.advancedbionics.com
[4] http://www.amis.com
[5] http://www.microchip.com
[6] http://www.minco.com
[7] http://www.powervar.com
[8] http://www.valtronic.com
[9] http://www.watlow.com