Ultrasound Portable Partitioning

Providing doctors with a handheld, portable ultrasound unit with which to help diagnose patients would be a tremendous tool for enhancing patient care. By examining the ultrasound signal chain and beamforming technologies, this article reviews the technologies that would be involved in designing and engineering such a device.

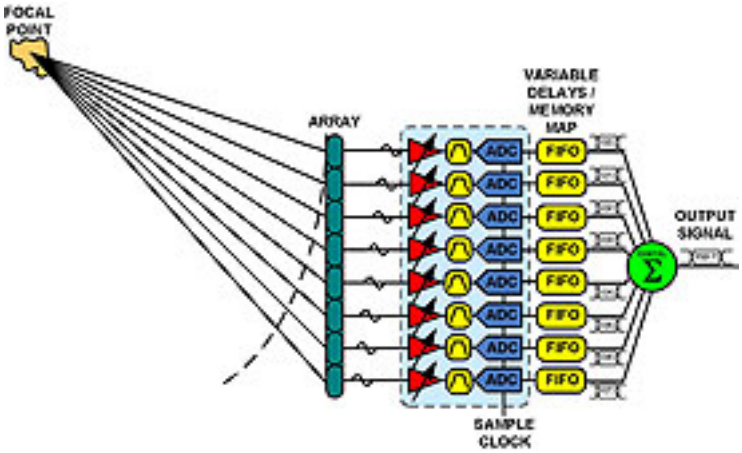

By Rob Reeder
Ultrasound systems are taking advantage of higher levels of integration, making them truly portable. Soon, they will be seen as the doctor's "new stethoscope."All ultrasound systems use a relatively long cable that contains a minimum of eightand as many as 256micro-coaxial cables, making it one of the most expensive parts of the system. In most systems, the transducer directly drives the cable, but cable capacitance loads the transducer elements and causes significant signal loss. High receive-side sensitivity is required to preserve the dynamic range and yield good system performance.

Ultrasound Signal Chain

On the transmit side, the beamformer determines the delay pattern and pulse train set for the desired focal point. The beamformer outputs are amplified by high-voltage transmit amplifiers to drive the transducers. These amplifiers are controlled by digital-to-analog converters or an array of high-voltage FET switches to shape the transmit pulses for better energy delivery. On the receive side, a transmit/receive switch blocks the high-voltage pulses. A high-voltage multiplexer is sometimes used to reduce the hardware complexity at the expense of flexibility.The time-gain control (TGC) path consists of a low-noise amplifier (LNA), variable-gain amplifier (VGA), and analog-to-digital converter (ADC). Under operator control, the TGC path maintains image uniformity during the scan. Good noise performance relies on the LNA, which minimizes the noise contribution in the following VGA. Active impedance control optimizes noise performance for applications that benefit from input impedance matching.

The VGA compresses a wide-dynamic-range input signal to fit within the input span of the ADC. The input-referred noise of the LNA limits the minimum resolvable input signal, whereas the output-referred noisewhich depends primarily on the VGAlimits the maximum instantaneous dynamic range that can be processed at a particular gain-control voltage. This limit is set in accordance with the quantization noise floor, as determined by the ADC resolution.
The anti-aliasing filter (AAF) limits the signal bandwidth and rejects unwanted noise in the TGC path prior to the ADC.

Beamforming Techniques

Beamforming, as applied to medical ultrasound, is the phase alignment and summation of signals that are generated from a common source, but received at different times by a multi-element ultrasound transducer. In the continuous-wave Doppler (CWD) path, receiver channels are phase-shifted and summed together to extract coherent information. Beamforming has two functions: it imparts directivity to the transducerenhancing its gainand it defines a focal point within the body, from which the location of the returning echo is derived.There are two distinct approaches to beamforming: analog beamforming (ABF) and digital beamforming (DBF). The main difference between an ABF and DBF system is the way the beamforming is done; both require perfect channel-to-channel matching. In ABF, an analog delay line and summation are used. Only one precision (very high resolution), high-speed ADC is needed. In a DBF system, on the other hand, 'many' high-speed, high-resolution ADCs are needed. Sometimes a logarithmic amplifier is used in the ABF systems to compress the dynamic range before the ADC. In DBF, the signal is sampled as close to the transducer elements as possible; the signals are then delayed and summed digitally.
DBF is commonly used in most modern image-acquisition ultrasound systems because it is more flexible, but each approach has advantages and disadvantages.

Advantages of DBF over ABF

- Analog delay lines tend to be poorly matched channel-to-channel
- Number of delay taps is limited in analog delay lines, and fine adjustment circuitry must be used
- Once data is acquired, digital storage and summing is "perfect," so channel-to-channel matching is perfect
- Multiple beams can be easily formed by summing data from different locations in the FIFOs
- Memory is becoming cheaper, therefore very deep FIFOs can provide finer delay
- Systems can be more easily differentiated through software only
- Digital IC performance continues to improve fairly rapidly

Disadvantages of DBF over ABF

- Many high speed, high resolution ADCs are needed (pulse-width Doppler

needs about 60-dB dynamic range, which requires at least a 10-bit ADC)
- Higher power consumption due to many ADCs and digital beamformer ASICs
- ADC sampling rate directly influences resolution and accuracy of phase delay adjustment channel-to-channel; the higher the sampling rate, the finer the phase delay
- System Partitioning

Before multichannel VGAs, ADCs, and DACs were available, manufacturers implemented ultrasound systems with custom ASICs. The custom circuits allowed designers to incorporate cheap, flexible functions, reducing the cost and minimizing the required number of external components. The disadvantage was that once designed, ASICs could not take advantage of scale and power reduction provided by future technology improvements. Their digital technology is not optimized for analog circuitry, so functions such as ADCs could not be integrated efficiently. Although portable systems could be designed, battery life was limited due to the ASIC's high power consumption. Finally, these custom devices were only available from a limited number of suppliers.With the advent of quad and octal TGCs, ADCs, and DACs, both the size and power were further reduced, thus bringing about new types of portable systems. Multichannel components allow the designer to divide the sensitive circuits between two or more boards, providing system scaling and good reuse of the electronic circuits over many platforms. Unfortunately, system scaling depends on the system split, and multichannel components make wiring difficult, and pose thermal challenges for mechanical designers.
Further integration of the TGC path using multichannel, multi-component integration makes the design easier by reducing the PCB size and power requirements. As higher level integration become more predominant, advantages once again follow in cost, size, and power reduction, leading to cooler systems and longer battery life. The AD9271 ultrasound subsystem satisfies the compactness requirement: its 14-mm 14-mm 1.2-mm package consumes only 150 mW per entire TGC channel at 40 MSPS. The AD9271 employs serial I/O to keep the pin count low, reducing total area per channel by more than 1/3, and power dissipation by more than 25%.
The ultrasound cable is costly and limits the dynamic range. An ideal solution would therefore integrate more of the electronic functions in the probe. With front-end electronics closer to the probe, less sensitivity would be required, minimizing the LNA requirements. The LNA could be moved into the probe electronics, or the VGA control could be split between the probe and the on-board electronics. Unfortunately, as the system gets closer to fitting into an ultra-small package, the design has gone full circle, customizing the probe and limiting the number of suppliers.
Most ultrasound companies view their intellectual property to lie within the probe and beamformer technology. Multichannel integration of commodity devices, including quad and octal ADCs, puts an end to high cost components and endless tweaking of individual TGC paths.

Conclusion

Once used for detection of large underwater bodies, ultrasound is now used in a variety of applications. In both medical and industrial applications, there is a growing trend towards portable ultrasound. It is only a matter of time until your cell phone will be able to send your mother a scan of her new grandson.

Rob Reeder *is a senior converter applications engineer working in the high-speed converter group at Analog Devices. He has published numerous papers on converters and converter testing. Reeder can be reached at 336-605-4074 or* rob.reeder@analog.com *[1].*

Source URL (retrieved on *05/25/2013 - 3:08pm*):
http://www.mdtmag.com/articles/2008/02/ultrasound-portable-partitioning

Links:
[1] mailto:rob.reeder@analog.com