Powering Ahead to a Successful Design

Benjamin Du

Power sources for medical devices must accommodate numerous requirements, from duration to size to durability. The market offers a plethora of choices of both primary (non-rechargeable) and secondary (rechargeable) batteries in a great variety of shapes, sizes, and chemistries. This article focuses on design considerations for primary cells, with a brief look at secondary cells.

Today’s medical device designers are faced with greater challenges as functionality is increased, specifications are more stringent, and space becomes smaller. Many components need to be considered, and batteries are no exception. The designers of the medical device need to determine what type of battery is needed and for what purpose during the early design phase. Primary cells come in a variety of chemistries (e.g., lithium, alkaline, silver-oxide, zinc-carbon, or zinc-air) and sizes (e.g., cylindrical or button cells), and can be used as the main power source or as a “backup” battery, such as for RAM memory or real-time clock backup. Some chemistries, such as alkaline and silver oxide, provide nominal 1.5 V open circuit voltage (OCV), while others, such as lithium, provide nominal 3.0 V OCV for most lithium variants. The typical voltage vs. time discharge characteristics need to also be considered in choosing a chemistry. Alkaline cells are among the most commonly used and lowest cost, but the voltage of the battery declines steadily during use until voltage cutoff. In contrast, lithium and silver oxide chemistries display an excellent and very flat (horizontal) voltage vs. time relationship until it reaches near end of life (the knee), after which, it quickly reaches voltage cutoff (often around 2.0 V). Cutoff voltage refers to the voltage level below which the application fails to operate correctly.

Medical device designers most often know the usage profile of the application (worst case usage patterns by the typical end customer) and expected life of the product. With additional knowledge of the electrical current profile (e.g. continuous or pulsed current parameters) along with temperature and cutoff voltage, the required “capacity” of the battery can be calculated. Battery manufacturers specify the “capacity” of their batteries as an important rating for comparison purposes in units of mAh (milli-amp hours), which quantifies the product of current and time. The capacity of a cell is largely dependent on both temperature and load of the application. Generally speaking, capacity is optimized at higher load impedances and temperatures. Temperature is also an important consideration in choosing a battery chemistry. Batteries not only have different ranges of operating temperatures, but also perform differently at low and high temperatures. At low temperatures, ions permeate at a slower rate through the battery separator (physical barrier inside the battery between the anode and cathode reactants to prevent short-circuiting), which could prevent achieving desired pulsed currents, and therefore is an important design consideration for applications with pulse type

currents. At higher temperatures, the self-discharge rate (SDR) increases, which could reduce the battery life considerably over longer periods of time, and so a low SDR battery is desirable for high temperature environments. SDR is the rate of decay (percentage) that the capacity of the battery decays over a given period of time at a specified temperature.

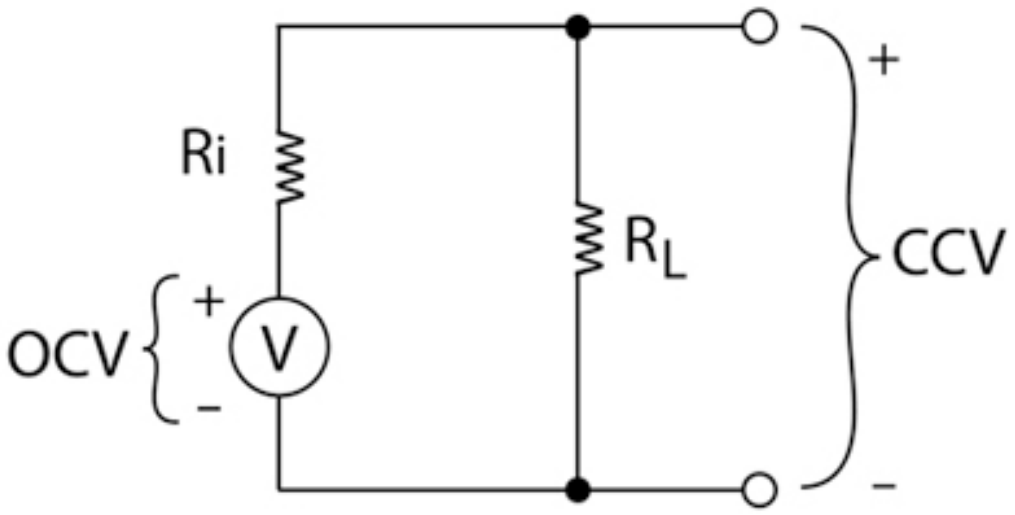

Battery model with internal resistance Ri

The internal resistance of a battery is sometimes overlooked by designers but also needs attention, especially for pulsed applications. The battery itself can be modeled as an ideal voltage source with an internal resistor Ri. The model battery then powers the load resistor, R(L) (Figure 1). The result is a voltage-divider network where Ri “steals” voltage away from the load and, therefore, the closed-circuit voltage (CCV) drops as Ri gets larger. The lower the internal resistance, Ri, the better since it is more likely the battery will be able to supply the necessary voltage across the load. Using circuit analysis, Ri can be derived: Ri= (OCV – CCV)xR(L)/CCV.

Ri varies between different battery chemistries, but for a specific chemistry also depends on other factors, such temperature, depth of discharge, and geometry/dimensions of the battery. At low temperatures, the ions move slower and therefore Ri is higher. Moreover, the smaller the battery (e.g., diameter), the higher the Ri. Lastly, as the battery is discharged, Ri increases gradually over time and increases exponentially near end of life (Figure 2).

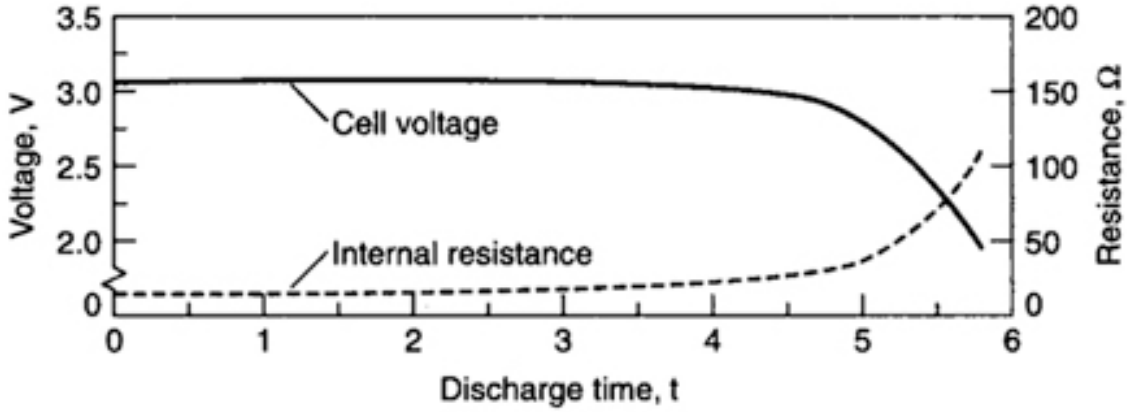

Typical discharge curve of a lithium manganese dioxide

From a mechanical perspective, the battery is frequently constrained to tight form factors. There may be situations, for example, where it may be more prudent to utilize two silver oxide batteries in series to provide 3V instead of one lithium coin cell. Mechanical mounting of the battery also needs consideration, such as whether to use cells with spot-welded leads intended to be soldered onto a printed circuit board, or for easy replacement to use a battery holder. For applications with a battery needing to be surgically implanted, the battery may be required to be non-magnetic (or have very little attraction to magnets). The reason for this is to prevent complications related to MRI machines that can provide magnetic fields as high as 3.0 teslas. Humidity, dust, and other environmental conditions may necessitate that the battery and associated electronics be hermetically sealed or encapsulated for extra protection.

There are many considerations related to choosing the right primary battery for a medical device design. Becoming educated about the power source and judicious planning will enable the medical device designer to optimize the operational life of the product.

Benjamin Du *is a sales engineering manager at* Renata Batteries *[1]/SKS. He is responsible for North American OEM sales and marketing activity and business development. He holds a Masters degree in electrical engineering and is also a registered nurse. Du can be reached at* bdu@sykessler.com *[2].*

Source URL (retrieved on *07/28/2014 - 2:10pm*):
http://www.mdtmag.com/articles/2010/05/powering-ahead-successful-design

Links:
[1] http://www.renata.com

[2] mailto:bdu@sykessler.com