Uses and Advances of Computed Tomography for Medical Device Analysis

Julien Noel

Computed tomography (CT) has come a long way since its public inception in 1972. The rapid improvement of computer technology and the increasing capabilities of CT scans have gone hand in hand. CT scans that used to take hours are now being completed in seconds. This increase in capabilities has led to CT scans being used more often and in more ways than ever before. The use of CT in the medical nondestructive testing (NDT) field is one example that has grown tremendously in the past few years, and it is also the focus of the following article.

Industrial Computed Tomography Process

Industrial CT uses a series of 2-dimensional images taken at specific intervals around the entire sample. Almost all types of industrial CT systems use three principal components: an X-ray Tube, an X-ray Detector, and a rotational stage. Everything is enclosed in a radiation shielding steel/lead/steel cabinet that usually ranges between 4 and 10 feet cubed. This allows use of the system in a public environment without any additional safety concerns.

Micro computed tomography (MicroCT) is primarily the same as standard CT except it uses a microfocus tube instead of a traditional tube. A MicroCT scan yields resolutions in microns due to the fact that the focal spot of a microfocus tube is only a few microns in size. For comparison, MicroCT resolution is about 100 times better than the best CAT scan in the medical field.

High quality industrial X-ray detectors used for CT, are typically a new generation Amorphous Silicon Flat Panel Area Detector, offering very high sensitivity, resolution, and bit depth. The resulting 2D X-ray images are very clear and the contrast is unparalleled.

Acquisition

A modern high-end CT scan consists of taking several 2D X-ray images around the object, preferably covering 360 degrees (complete rotation). CT systems typically acquire between 360 images (1 image every degree) and 3600 images (1 image every 0.1 degree), depending on the final desired resolution. Each image is between 3 to 10 Megapixels and is also averaged and filtered to reduce noise. The 2D digital images taken during this step are saved directly into a single folder which will be

used in the next step of the CT process.

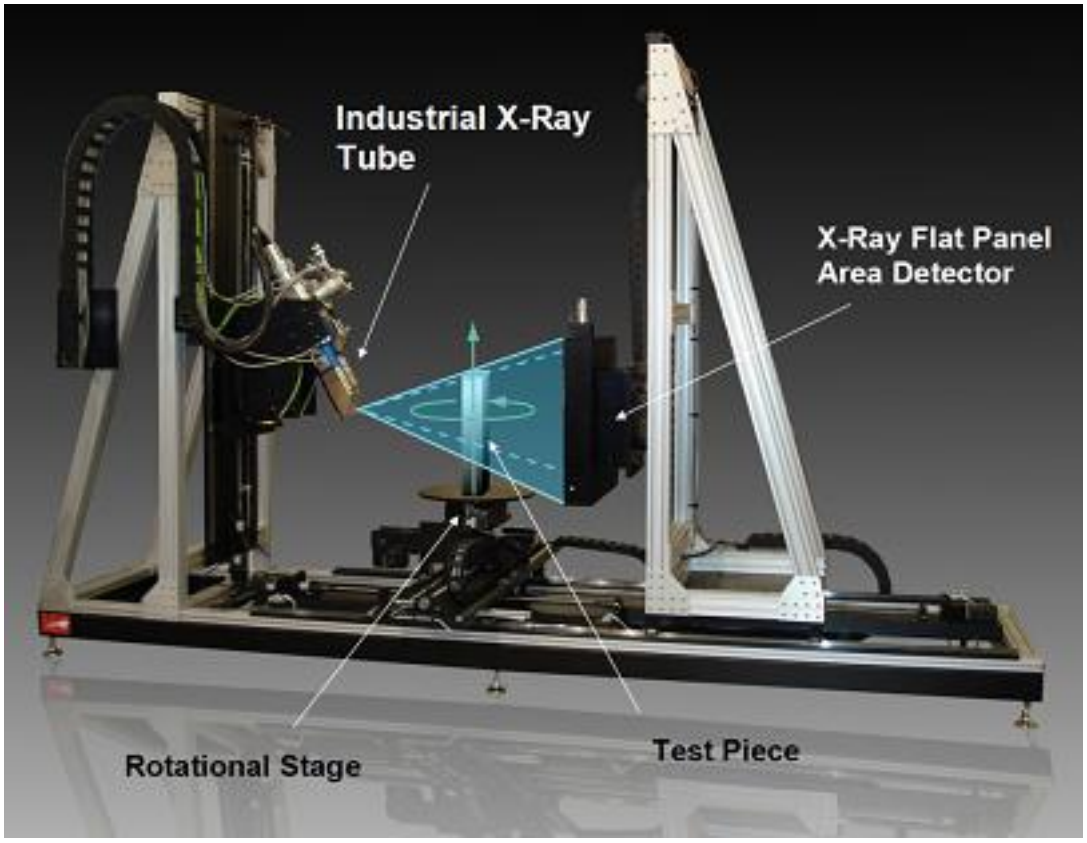

Reconstruction and Visualization

Once the acquisition process of the CT scan is completed, CT calibration and CT reconstruction algorithms are used to reconstruct the 3D CT volume. These 3D images are made of Voxels (three dimensional Pixels), and with the use of visualization software, the 3D volume can be manipulated in real time. Because of this, it is possible to slice through anywhere inside the object, inspect and look for defects, take accurate measurements, reconstruct a surface model, etc.

Industrial CT technology is improving very quickly. While a few single CT slices could take hours to generate years ago, it is now possible to reconstruct complete 3D models with billions of Voxels in just seconds. This opens the door for numerous new applications like 3D inline automatic defect recognition, 3D reverse engineering, rapid prototyping, 3D metrology, etc. In that regard, industrial CT has become a very competitive technology for 3D scanning.

The principal benefit of using 3D CT for scanning or digitization is that a complete model with both external and internal surfaces of an object is obtained without destroying it. Moreover, CT works with any surface, shape, color, or material (up to a certain density and/or thickness penetrable with X-rays). Generally, a modern

start-to-finish CT scan can finish in as fast as two seconds or take longer than an hour, depending on the resolution requirements and size and/or density of the object. Overall, the resolution is excellent both internally and externally, which in turn can fulfill virtually any designer’s needs.

Computed Tomography in Use

Computed Tomography has proven to be an outstanding tool for many industries. Industries such as medical device, pharmaceutical, aerospace, electronics, and many more have made CT a part of everyday life. The demand for CT continues to be tremendous, largely due its versatility and capabilities to do what other technologies cannot. CT scans nondestructively provide excellent resolution internally and externally, which then allows for measurement on surfaces both inside and outside an object. Also, due to the penetration of X-rays, CT scans are unaffected by certain object characteristics such as dark, reflective or transparent surfaces and/or shaded zones on the item that can cause difficulty with other 3D scanning methods. Furthermore, 3D CT reconstruction models can be directly compared to CAD models and/or other CT models in order to display differences or commonalities in measurements, densities, voids, etc.

The following images show a 3D CT reconstruction of multiple pharmaceutical tablets. The CT model can be manipulated in real time 3D and it is also possible to slice through it in any direction for internal inspection.

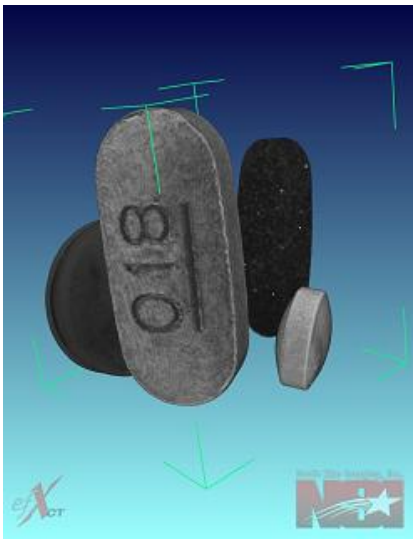

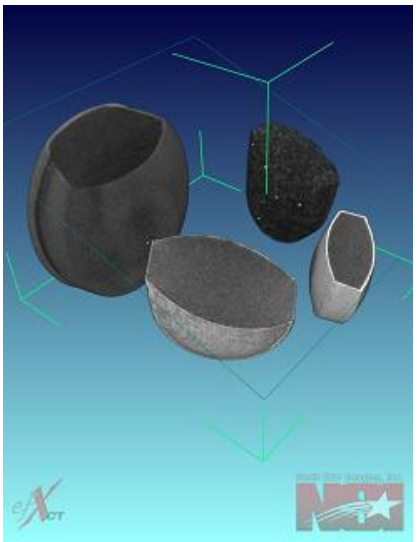

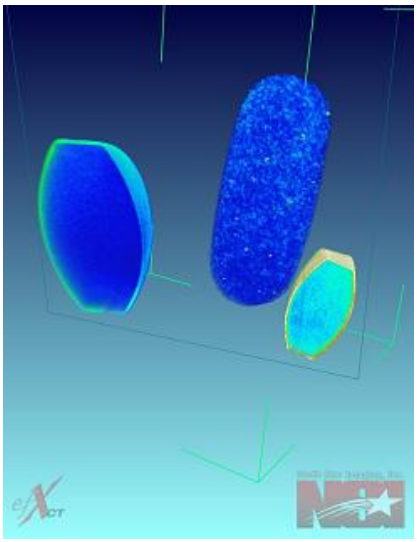

The reconstruction process consists of complex algorithms that transform the stack of 2D X-ray images into a 3D Voxel volume model. This process uses a GPU

(Graphics Processing Unit) based software which utilizes the new NVIDIA graphic card capabilities. NVIDIA's graphic card employs hundreds of computation cores. This large number of cores accelerates the process and increases the speed of 3D CT reconstruction by a factor of up to 50x. Developed with a CUDA interface and the latest technology in graphics cards, this proprietary North Star Imaging [1]software now makes it possible to perform very fast CT reconstruction, which in turn boosts the number of achievable scans. Due to the high speed capabilities, inline CT scanning for 100% quality inspection or 3D metrology control is now attainable.

The CT system layout consists of a radiation shielded enclosure, which houses the X-ray tube, detector and rotational stage. Adjacent to the enclosure is a computer workstation, consisting of a 2D X-ray console for the set up and acquisition steps, and a 3D CT supercomputer workstation for volume reconstruction and visualization.

Many options are possible through the use of a 3D CT reconstruction volume model. For basic 2D measurements, the Slice Window pictured below is generated from the cutting plane in the 3D volume. From there a length, diameter, angle, etc. can be applied on the single image. The main benefit is that any feature, part or even defect inside a structure or an assembly can now be measured without destroying it.

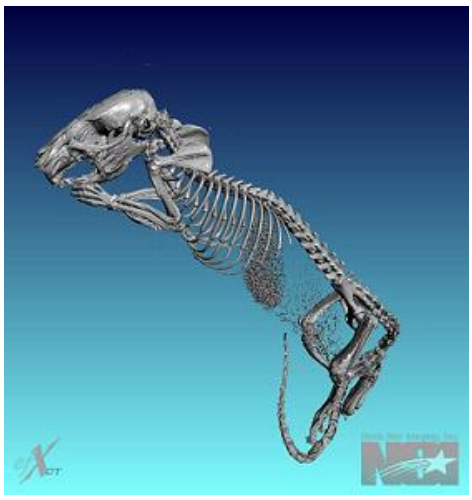

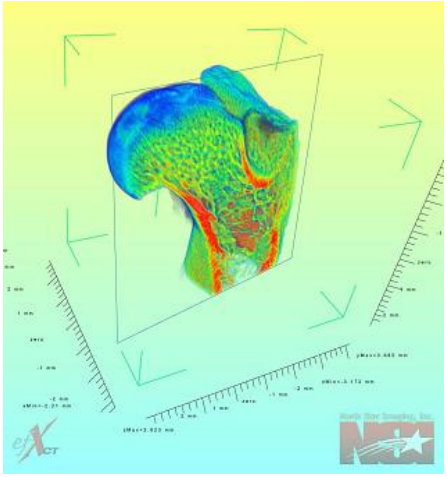

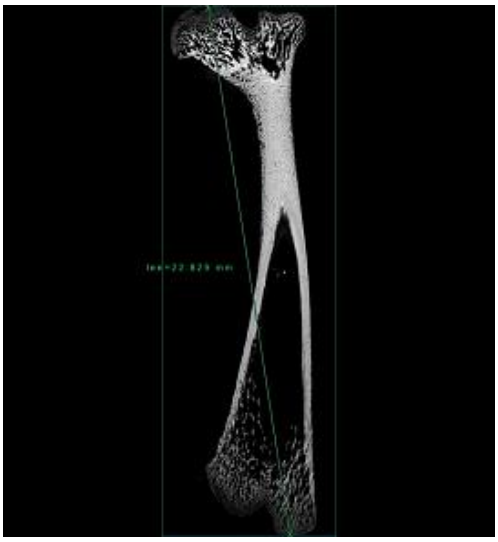

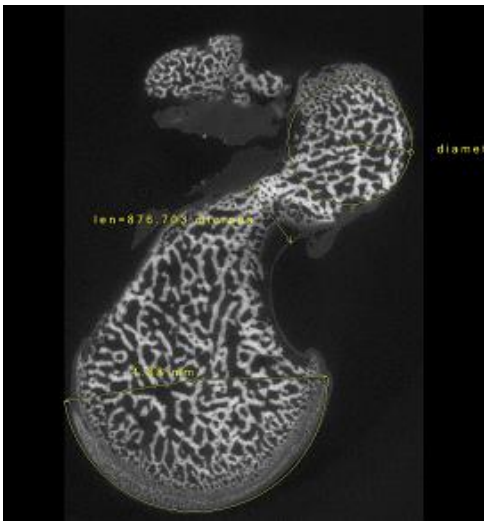

The 3D CT reconstruction, which is made of several million or billion Voxels, can also be transformed to a surface model. The resolution of the 3D model depends on the number of Voxels generated from CT reconstruction. A threshold value of radiodensity is chosen by the operator and set using edge detection image processing algorithms. From this, a 3-dimensional model can be constructed and displayed on screen. Multiple models can be constructed from various different radiodensity thresholds, therefore allowing different colors to represent each component of an assembly. Typically, models are composed of polygons numbering from the thousands to 50 million.

The pictures below show a surface reconstruction (polygon mesh) of an extracted wisdom tooth and an inhaler device. All the internal structural features are reconstructed as well since the CT reconstruction provides volumetric information.

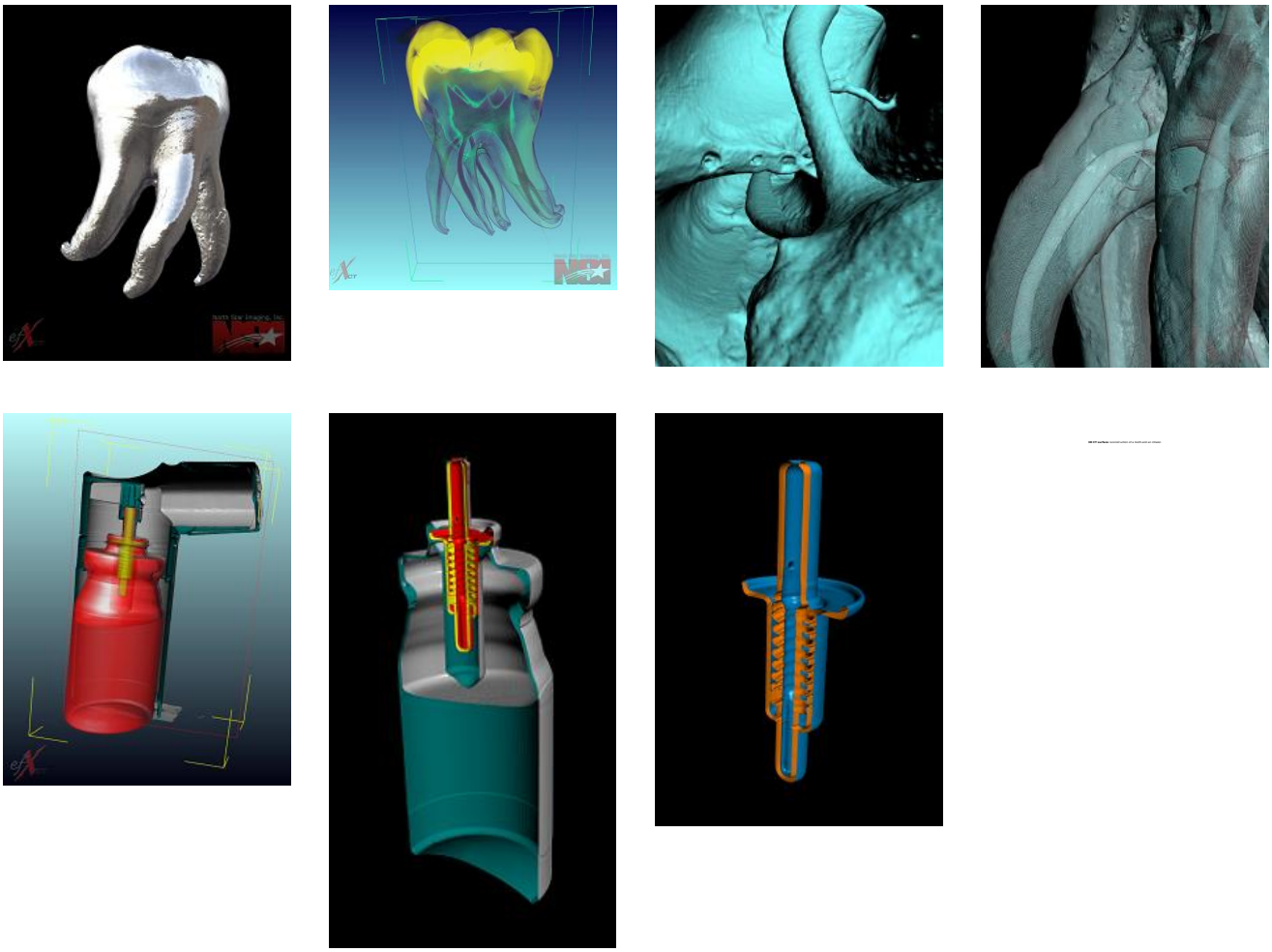

With the generated polygon mesh surface model, many different applications

become available to the user. The output format (points cloud, STL, WRL) is compatible with most CAD software for Reverse Engineering applications, rapid prototyping machines for modeling, Finite Element Analysis software for simulations, etc.

In most cases, the polygon mesh generated by the CT system can be used in the above applications without modification and typically, the resolution is higher than needed. However, in order to modify or take measurements of the CT surface model with a CAD software, the CT model needs to be processed to make it editable. New generation modeling software (e.g. Geomagic, Rapidform, Polyworks) propose semi-automatic tools to transform the polygon mesh to Nurbs Surfaces and parametric CAD models. Manual operation is still necessary to transform the scanning surface to real solid CAD.

Comparing 3D CT Image to CAD Model

Dimensional analysis is one key application available for model comparison. Since CT and especially microCT provides very accurate dimensions on surfaces, the technology is often used for metrology studies. Measurements can be done either directly on the surface using any CAD or Metrology software, or it can automatically compare the CT model with the CAD model, or even the CT model with another CT model.

Geomagic Qualify is a very efficient software for this type of application. It has the capability to perform a 3D and/or 2D dimensional comparison in very few steps, as well as export metrology reports containing tons of information. Once again, the data includes both internal and external surface information.

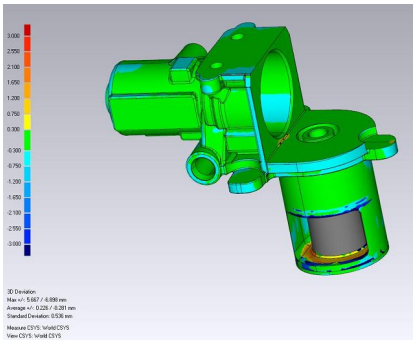

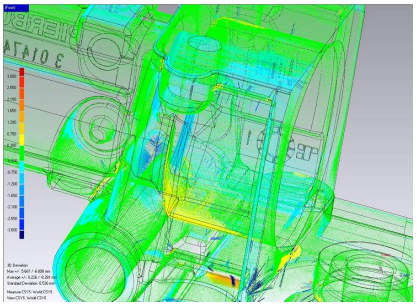

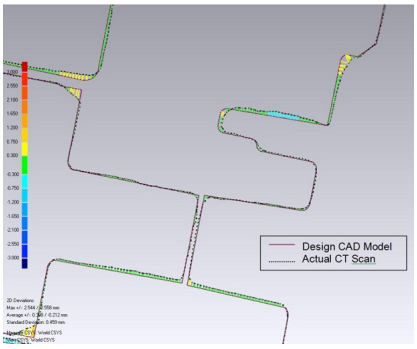

Due to the proprietary nature of medical devices, a CAD to CT comparison is not available for display. As a replacement, examples above show a dimensional

comparison between the Solidworks CAD model of a casting provided by Twin Cities Die Casting, and the CT surface reconstruction created by NSI.

In order to do this comparison, the two models needed to be aligned. Different alignment tools are available, ranging from very fast and automatic Best Fit, to manual alignment. Once the two models are aligned, a simple 3D comparison option automatically creates a colored view showing all the dimensional differences between the two models. In the example above, all the dimensional differences between the Solidworks model and the actual CT surface (polygon mesh) are represented by colors. Tolerances between -0.3mm and 0.3mm are shown in green. Yellow denotes the areas where the CT scan measurements are larger than the original CAD model and blue indicates smaller measurements. It is possible to change tolerance values and the color code to cater to a specific project or preferences. Numerical values are an available option as well.

All in all, 3D CT is now accessible for most industries as a viable tool; user-friendly interfaces, increased scan speeds, and decreasing prices have all attributed to the rapid growth of this technology in the marketplace. Having very accurate internal dimensions without destroying the item, along with the ability to compare to a reference model is entirely unique to CT. There are no shaded zones, it works with all kinds of shapes and surfaces, there is no post-processing work needed and the resolution is excellent. Above all, the greatest benefit is the ability to nondestructively obtain the internal structure of the object, and CT is the only technology capable of achieving such performance.

Julien Noel *is the Computed Tomography Product Manager for North Star Imaging, Inc. based in Minneapolis, Minnesota.*

Source URL (retrieved on *03/12/2014 - 11:33am*):
http://www.mdtmag.com/articles/2010/07/uses-and-advances-computed-tomography-medical-device-analysis

Links:
[1] http://www.4nsi.com