High Precision Pressure Sensors in CPAP Respiratory Therapy Equipment

Dr. Adriano Pittarelli

Continuous Positive Airway Pressure (CPAP) machines are used to treat sleep apnea, a disorder that restricts breathing, and potentially causes stress to both the heart and circulatory system. Sensortechnics' HDI and HCE series pressure sensors monitor the instantaneous pressure at the output of the machine and inside the breathing mask, increasing accuracy and sensitivity for individual CPAP users.

Sleep apnea syndrome is a breathing disorder that is characterized by pauses in breathing (referred to as apneas) during sleep. It can be treated successfully with CPAP respiratory therapy equipment. These modern medical machines maintain a slight positive pressure in the patient's airway, thus helping to support the process of inhalation. Pressure sensors provide continuous monitoring of the therapy pressure, and are an essential component of pressure regulation on modern CPAP machines.

Obstructive Sleep Apnea

The most common sleep-related breathing disorder is obstructive sleep apnea (OSA). In OSA, sagging of the tissues in the throat region leads to narrowing of the upper airway (obstruction). The reduction in pressure arising from the flow of air during inhalation can result in complete closure of the upper airways and hence cessation of breathing (apnea). As a result of this breath obstruction, important organs such as the brain and heart are no longer sufficiently supplied with oxygen. The brain responds to this by initiating a waking reaction, and the patient draws breath again, snoring loudly. Although the patient is not usually aware of waking, these episodes disrupt the pattern of healthy sleep and prevent deep sleep and REM sleep phases. The recurring interruptions to breathing cause a great deal of stress to be placed on the heart and circulatory system, which can lead to high blood pressure and cardiac arrhythmia. The effectiveness of sleep is considerably diminished, resulting in extreme fatigue and a dangerous tendency to doze off during the day.

CPAP Positive Pressure Ventilation

For more severe cases of OSA, the most promising and, nowadays, most frequently employed therapy is CPAP positive pressure treatment. CPAP stands for Continuous Positive Airway Pressure, and denotes the use of continuous positive pressure ventilation during sleep. The patient is supplied with an artificial breathing atmosphere at a slight positive pressure (e.g. 3 inH_2O) in which he is able to

breathe spontaneously. The positive pressure, known as “pneumatic splinting” of the airway, keeps the throat space open or stabilizes it. Accordingly, obstructions and breathing stoppages are prevented.

Pressure Stability as a Mark of Quality

Modern CPAP machines are designed to be small, portable, and convenient to use. The therapy pressure prescribed by the physician is generated by a centrifugal fan and applied to the patient by means of a hose system and a breathing mask (Figure 1). Standard CPAP machines deliver a continuous positive pressure that remains the same during both the inhalation and exhalation phases, allowing the patient to inhale and exhale against the pressure. The therapy pressure set on the CPAP machine is, however, affected by the breathing of the patient. The pressure falls with every inspiration and rises with each expiration, compromising the quality of the therapy and resulting in increased breathing work for the patient. Today’s machines therefore incorporate a high precision pressure sensor, which constantly compares the actual value of the pressure with the set value specified for the therapy. Variations in pressure can then be corrected within a very short space of time by dynamically controlling the output of the fan. Pressure stability is a fundamental mark of quality and an important comparison parameter for these controlled CPAP machines.

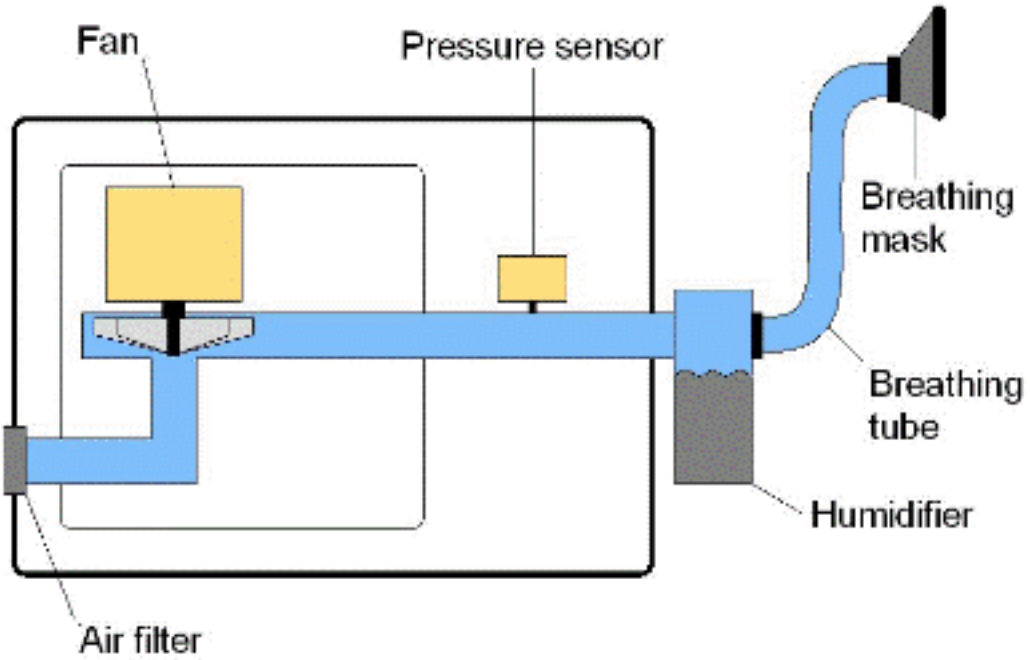

Figure 1: Schematic view of a pressure-controlled CPAP machine

Sensortechnics’ [1] HDI and HCE series pressure sensors monitor the instantaneous pressure at the output of the machine and inside the breathing mask. The accuracy and sensitivity of these devices allow them to detect pressure variations of just fractions of an inch water column. When they are matched with modern control electronics and powerful fans, the short response time (in the millisecond range) of these sensors makes it possible to correct for pressure variations very quickly.

Piezoresistive Silicon Pressure Sensors

Because of their high sensitivity and accuracy, silicon-based piezoresistive pressure sensors are suited for use in CPAP respiratory therapy equipment. The well-proven piezoresistive pressure measuring cells contain a thin silicon membrane. Laid out on the membrane are four resistors in the form of impurity atoms implanted in the crystal lattice (Figure 2). When pressure is applied to the membrane, the resistances change as a result of the mechanical stress (the piezoresistive effect). If the integrated resistors are then connected to form a Wheatstone bridge and supplied with an electrical potential, a sensor output signal is generated that is proportional to the applied pressure.

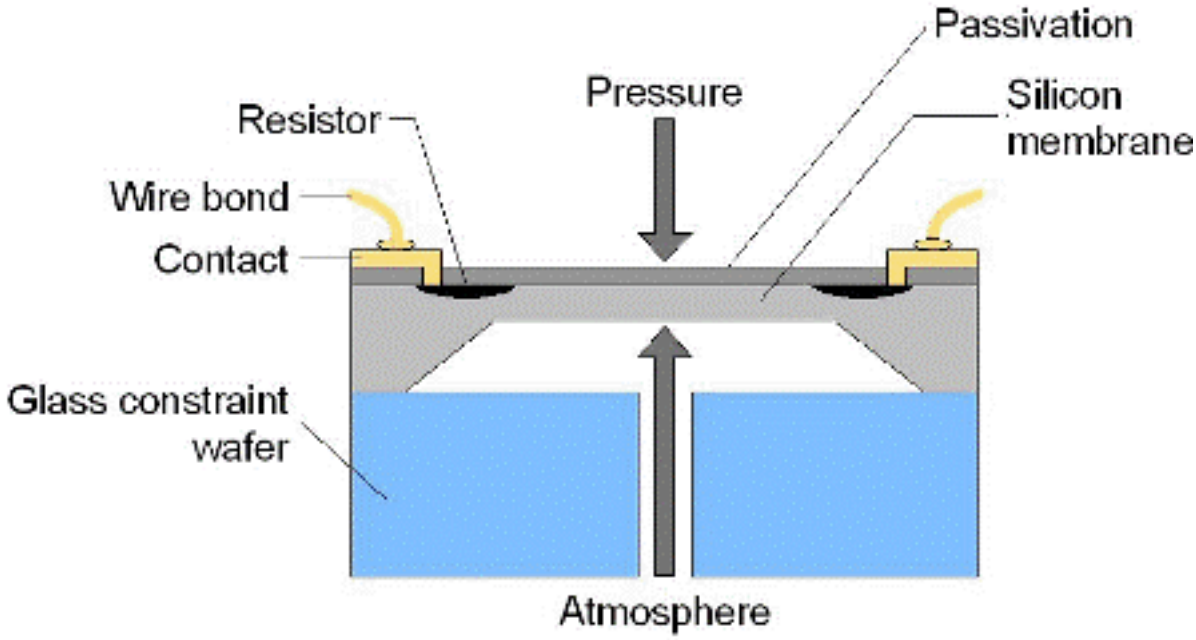

Figure 2: Basic design of piezoresistive silicon pressure sensors

Silicon offers particular advantages for the manufacture of piezoresistive pressure sensor chips. For example, silicon's single crystal structure, allows it to only exhibit elastic deformation, returning to its original state after the applied pressure is released. As a result, material fatigue and hysteresis effects are virtually eliminated. The semiconductor resistors on the silicon membrane are very sensitive, even to very small applied pressures and pressure changes, thus allowing measurement ranges of just a few inches water column.

The measuring bridge of the basic silicon cell delivers output signals in the mV range. These signals have tolerances in the zero pressure offset and pressure sensitivity that depend on their design and the production processes used. In addition, both the implanted silicon resistors and the pressure sensitivity are dependent on temperature, and change over the operating temperature range of the sensor. Calibration and compensation techniques can be used to correct the errors individually for each sensor. The conventional method of correction uses passive resistor networks or active components such as diodes and transistors. The approach allows overall accuracies of the order of 3% of the measurement range (FSS) to be achieved. Sensors with this degree of precision are, however, not sufficient for controlling the latest pressure-stabilized CPAP machines.

Digital Signal Processing for Highest Accuracy

In order to achieve highest overall accuracy with an error band of less than ±0.5% FSS, Sensortechnics' HDI and HCE pressure sensors apply digital correction to the signal-pressure characteristic curve. The advantage of this method is that the sensor signal is directly modified electronically. Consequently, all error quantities, such as offset and span calibration, temperature coefficient of offset, temperature coefficient of span and nonlinearity, can be corrected as a complete system. Since the signal processing is performed after the sensor has been fully assembled, it is also possible to correct all influences of the production process.

The analog mV output signal from the measuring bridge is amplified and, together with the corresponding reference signal from an integrated temperature sensor, digitized by a 15-bit A/D converter (Figure 3). A microprocessor uses a correction formula together with sensor-specific calibration coefficients to calculate the correct pressure value. The calibration coefficients for each individual sensor are determined beforehand from calibration measurements conducted over the entire pressure and temperature range, and are stored in the EEPROM. The corrected sensor signal can be read out as a digital pressure value via an I²C or an SPI bus interface. An analog voltage output signal is also provided.

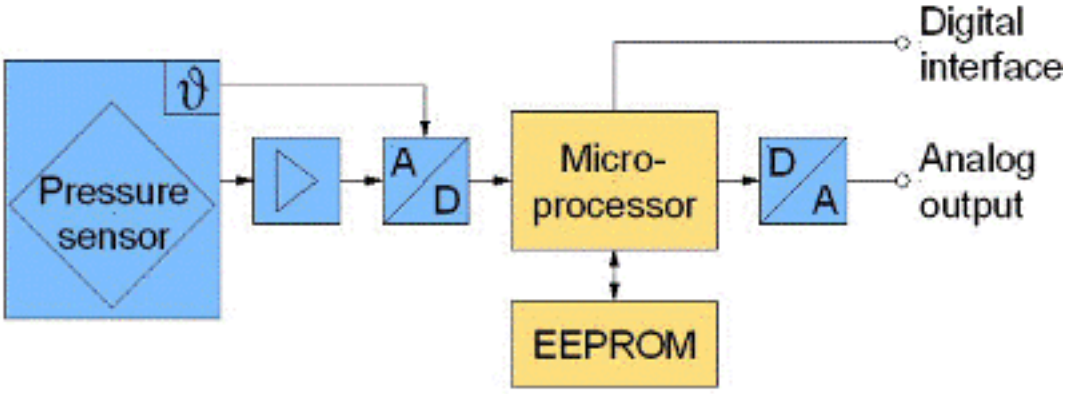

Figure 3: Method of digital signal processing used in HDI and HCE pressure sensors

Latest Manufacturing Technologies

HDI and HCE pressure sensors are manufactured from discrete silicon chip elements under clean room conditions, using the latest design and packaging technologies. Using highly automated series production methods, the sensor elements are mounted on a thick-film ceramic substrate and electrically connected with the help of the latest Chip-on-Board technology. The assembly is then enclosed in a pressure-tight miniature plastic housing. The use of highly elastic adhesives and matched expansion coefficients for all materials ensures that the effects of mechanical stress are minimized, thus giving rise to extremely stable pressure sensors. The HDI and HCE series are offered in a variety of SMT and DIP packages for flexible and space-saving integration into CPAP machines. Sensors using either 3 V or 5 V power supplies are available. Further applications for these pressure sensors include ventilators, respirators, anesthesia equipment, and oxygen concentrators.

Dr. Adriano Pittarelli *is Senior Product Manager at Sensortechnics. He can be reached at +49 (0)89 80083-0 or* info@sensortechnics.com *[2].*

Source URL (retrieved on *07/28/2014 - 11:11am*):
http://www.mdtmag.com/articles/2011/07/high-precision-pressure-sensors-cpap-respiratory-therapy-equipment?qt-recent_content=0

Links:
[1] http://sensortechnics.com
[2] mailto:info@sensortechnics.com