Choosing Sensors to Improve Sleep Apnea Machine Efficiency, Accuracy, and Reliability, and Enhance Patient Comfort

A.J. Smith

Sleep apnea is a condition that impacts millions of people and can have a significant impact on their sleep. Treating such a condition can be challenging for medical device manufacturers. As such, this article looks at sensor solutions that can be used within a sleep apnea device, explains the differences, and provides valuable insight on the technology.

Sensors for sleep apnea machines help control airflow, pressure, humidity, and temperature, and enable smooth motor control.

An important concern for millions of affected people worldwide, sleep apnea is the repeated cessation of breathing during sleep, sometimes hundreds of times during the night and often for a minute or longer. If left untreated, sleep apnea can cause memory and weight problems, high blood pressure, and cardiovascular disease. The resulting lack of restful sleep and fatigue may also be responsible for job impairment and motor vehicle accidents.

A common treatment option is the use of a Positive Airway Pressure (PAP) machine. The patient wears a mask that uses pressure to send air flowing through the nasal passages so they don’t collapse and cause breathing to cease.

There are three main categories of PAPs (listed in order of complexity/cost):

- CPAP (Continuous Positive Airway Pressure) provides a constant pressure to the patient. This positive pressure keeps the throat from collapsing during sleep and allows the patient to breathe freely without worry of episodes of non-breathing.
- Auto-PAP (Automatic Positive Airway Pressure) measures the resistance in a patient's breathing. The amount of continuous pressure delivered to the patient is then automatically tuned to the minimum required to maintain an unobstructed airway on a breath-by-breath basis.
- Bilevel PAP (Bilevel Positive Airway Pressure) provides two levels of pressure: IPAP (Inspiratory Positive Airway Pressure) and a lower EPAP (Expiratory Positive Airway Pressure).

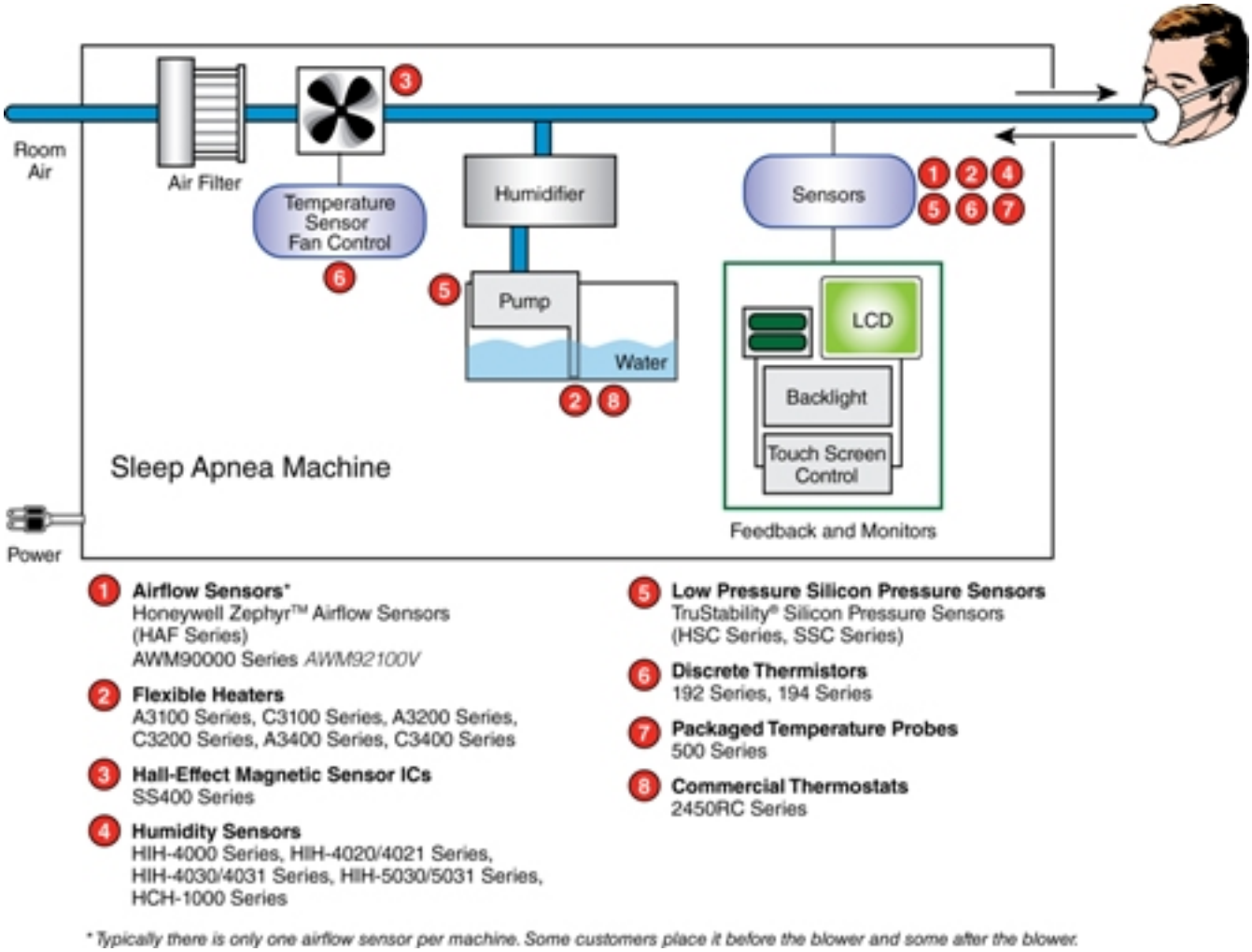

A typical sleep apnea machine uses airflow sensors, magnetic sensors, humidity sensors, temperature sensors, and pressure sensors.

Types of Sensors for Sleep Apnea Machines

There are a variety of sensors that may be used in sleep apnea machines to monitor and help control airflow, pressure, humidity, and temperature, and to enable smooth motor control.

Airflow Sensors
These types of sensors monitor the patient's breathing and send an output that reduces the flow of the machine's internal blower fan when the patient starts to exhale. The resulting lowered resistance prevents the patient from feeling as though he is "fighting" against the machine when breathing.

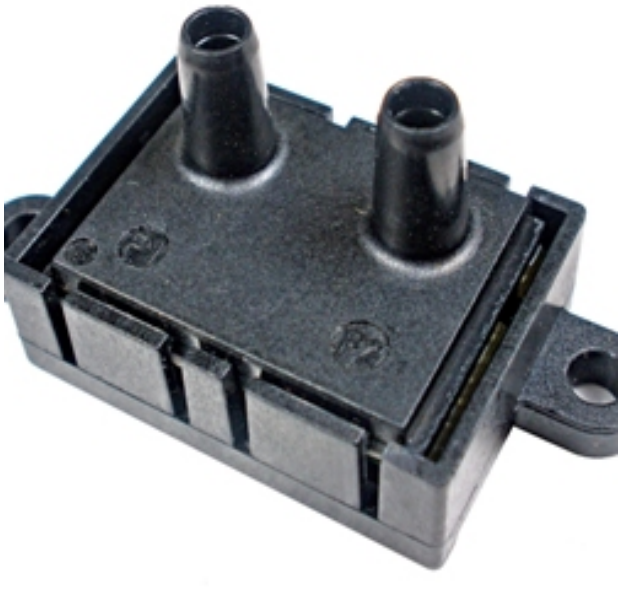

Honeywell's Zephyr Airflow Sensors
[1] can save sleep apnea machine manufacturers time and money because the sensor's linear output provides a more intuitive sensor signal than the raw output of basic airflow sensors, often eliminating the need to linearize the output.

Machines that use airflow sensors to detect the breathing cycle are more comfortable for the patient and are more likely to be used regularly than equipment without this feature. Some insurance companies and doctors often prefer this equipment due to greater patient compliance. These sensors are used in Auto, PAP, and Bilevel-PAP machines.

Airflow sensors used in sleep apnea machines need to provide high resolution and accuracy sensitivity in order to sense small airflow changes that allow for more precise control of how much air is delivered to the patient. These sensors need to be able to precisely measure how much air is being delivered and to detect the presence or absence of airflow.

Another important consideration is power draw. Low voltage draw enables sleep apnea devices to be powered by batteries, giving patients more flexibility and freedom.

Finally, as patients are trying to sleep, it is important to control the noise generated by the sleep apnea machine's motors. A loud motor or buzzing sound defeats the purpose of the sleep apnea machine. Using an airflow sensor with a fairly low pressure drop is required because if the pressure drop sensitivity is too high, the motor works harder (pressure drop equals resistance in the sensor), which increases noise and reduces the motor’s useful life.

Pressure Sensors
Low pressure board mount pressure sensors may also be used to monitor the pressure delivered to the patient in all three types of PAP machines. These sensors are designed to monitor the air pressure delivered to the patient. When choosing a pressure sensor for sleep apnea machines, consider long-term stability, small size, and low power consumption, as well as a sensor that provides the lowest pressure drop to help reduce noise and vibration—important considerations for a restful night’s sleep and patient compliance.

Magnetic Sensors
Magnetic sensors enable smooth motor control that reduces the noise and vibration generated by the fan systems that are used to cool the motor assembly. In addition to enhancing energy efficiency and providing a stable operation, these sensors need to be small to allow for the design of compact, automated, and lower-cost assemblies.

Humidity Sensors
Humidity sensors may be used to deliver warm and moist air, which often enhances patient comfort. When introducing moisture into the air stream, it must be monitored and controlled. Humidity sensors, coupled to a microcontroller designed to measure the humidity of the air stream and to interact with the controller, ensure that the correct level of moisture is present.

Temperature Sensors
For temperature sensing, sleep apnea machine manufacturers have a choice of sensor components from which to choose to help deliver air that is warm and moist so that the patient experiences a comfortable breathing situation. This may also help reduce sore throats caused by breathing cold, dry air.

Discrete thermistors are usually installed directly into the air stream and are designed to monitor and control air temperature. The sensor is coupled to a microcontroller designed to monitor air stream temperature and interact with the controller that controls and regulates the temperature of the air stream.

Manufacturers can choose to assemble their own sensor probe system using the thermistor, or they can use small, easy-to-install temperature probe assemblies to position their thermistor elements within the media to be monitored as well as protect the thermistors against damage. The assemblies also hold direct thermal or

fluid flow evenly across the thermistor for accurate temperature sensing.

Conclusion
This wide range of sensor types are designed to work with processors, controllers, motors, and other sophisticated mechanical and electronic components so that sleep apnea machines operate efficiently, accurately, and reliably.

A.J. Smith is the product marketing director for pressure and thermal sensors at Honeywell *[2]. He can be reached at* andrew.smith5@honeywell.com *[3].*

Source URL (retrieved on *07/25/2014 - 4:21am*):
http://www.mdtmag.com/articles/2011/12/choosing-sensors-improve-sleep-apnea-machine-efficiency-accuracy-and-reliability-and-enhance-patient-comfort

Links:
[1] http://sensing.honeywell.com/index.cfm?ci_id=140301&la_id=1&pr_id=157426
[2] http://sensing.honeywell.com/
[3] mailto:andrew.smith5@honeywell.com