Brushless Motors with Integral Motion Controls Benefit Medical Product Development

John Morehead

Product development in medical devices is rapidly embracing the distributed motion benefits of brushless servo motors with integral motion controls for many reasons. The most important is that smart servo motors allow medical device developers to concentrate on and grow their core competencies without having to get into the minutiae of motion control, a specialized field of engineering unto itself.

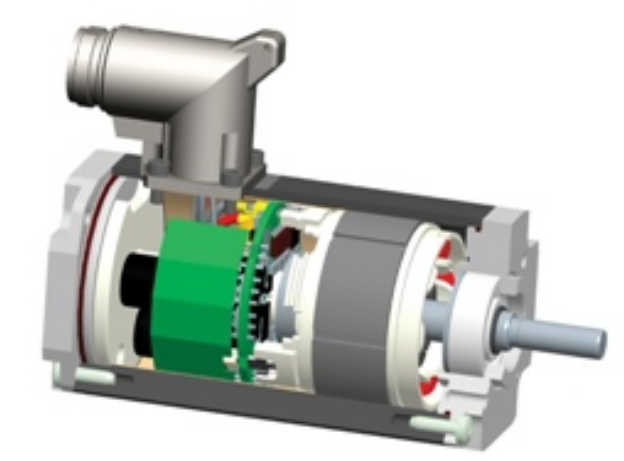

Cutaway view of (Dunkermotor BG45SI) integral control brushless motor, with new control redesigned to reduce size by 25%

In the 1990s, innovators in the motors and motion control industries recognized that advances in electronic components offering decreased size and increased performance and computing capabilities could bring numerous benefits from not only a cost but also a performance standpoint to the then developing brushless DC motor field. This would occur by integrating the formerly discrete motor and control devices together into a compact, single component only somewhat larger than the motor itself. The challenge then was to design controls compact enough to fit the motor’s form factor from both an electronics and mechanical perspective that would perform reliably for many years when attached to a source of inherent heat generation—the motor.

Initial success was achieved and, from the mid-1990s onward, a variety of brushless motors with integrated controls were introduced with capabilities ranging from

simple speed control to full-on intelligent servo motors. These incorporated the motor, its power electronics, motion controller, software, feedback, IO, and communications in a single integrated mechatronic component.

These integral control or “smart” motors facilitate true distributed motion by freeing medical equipment design engineers from large, expensive, complex, and multifunction centralized controls with their enclosures and accompanying network of costly, EMI-prone cabling and wiring. By incorporating the motion controls directly into the individual axes of motion, designers of medical diagnostic and surgical equipment and devices, as well as laboratory and home healthcare equipment, found many new benefits.

Benefits of Integrated Control

While the benefits are numerous, the one that surprisingly (or not) gets the most attention is reduced cost. When specifying brushless motors in the past, it was not unusual that the requisite stand-alone electronics to provide the commutation and simple speed control capabilities cost more than half as much as the motor itself, not to mention the wire or cabling and connectors needed to mate the two components. The integrated control approach is much more economic.

Other economies come in the form of significantly reduced installation and start-up time. The integrated control solution approaches plug-and-play. These benefits are further multiplied by the number of axes of motion in which integrated control motors are used in a device.

Since brushless DC motors are typically higher in efficiency than the motors they replace, the equipment builder’s customer benefits from that in today’s energy conscious world. Many of today’s integral control motors are also available with high environmental protection ratings like IP65 and as a single, integrated unit offer high reliability from that standpoint. Others can be provided with IP69K protection where high pressure washdown at elevated temperatures with harsh chemicals is required.

From a medical device design standpoint, the integrated control solution saves space and greatly simplifies the device’s overall layout, wiring, and parts count. Integral controls also reduce electromagnetic interference (EMI).

BLDC: 45, 65, and 75 mm frame size integral control brushless motors, shown with matching gearboxes and brakes

When networked, integral control motors can reduce bus load and when provided with integral encoders, connection distance to the controller is no longer a factor and the loop is closed in the motor. Some versions can also provide important emergency capabilities, such as returning to a safe position when there is a network failure.

From a reliability standpoint, some integral controls are designed with a MTTF up to 650,000 hours and it is unlikely many applications will have an expected lifetime beyond the 74 years that will accommodate. Brushless motors themselves can offer five times the lifetime of brushed motors.

With ever-increasing costs of field service, should there be an integrated control motor problem, the time required to diagnose and replace the component is significantly reduced. In addition, the inevitable “finger pointing” by discrete component suppliers is eliminated.

Perhaps the greatest benefit for medical device designers adopting integrated control brushless motors is the continued advancements in the field of silicon and software that contribute to the advancement of these solutions, not only from a performance and reliability standpoint, but in terms of value as well.

Just as fractional horsepower gearmotors freed factories in the 1920s from their cumbersome, inefficient and unreliable overhead networks of shafts and pulleys connected by leather belts, today’s brushless servo motors with integral intelligence controls allow medical equipment builders to shorten product development time, reduce wiring complexity and installation costs, and increase machine efficiency and reliability, while allowing design engineers more time to focus on the other components and control architecture more specific to the medical device’s intended functions.

Types of Integral Control Brushless Motors
Brushless motors with integral controls can offer a wide variety of capabilities. The following is a representative overview of a few of the many types available:

Integrated Commutation Electronics
This is perhaps the simplest embodiment and, in some applications, an easy, long-life, maintenance-free drop-in replacement for brushed DC motors. Many of these two-wire motors are for single-direction applications, as in pumps, and offer not only simple speed control by varying the DC voltage, but in most cases, the life of the motor is increased by a factor of five or more. Variations have the ability to reverse direction and stop and hold via more IO.

Integrated 4-Quadrant Digital Speed Control
These motors can be commanded through digital inputs to run in either direction, stop and hold with torque, or coast to a stop. Other inputs can switch between

preset speeds (field programmable) or allow for variable analog speed reference. Accel/decel ramps can be field programmed and digital outputs give hall-effect pulses, direction of rotation and ready/error state information back to a PLC.

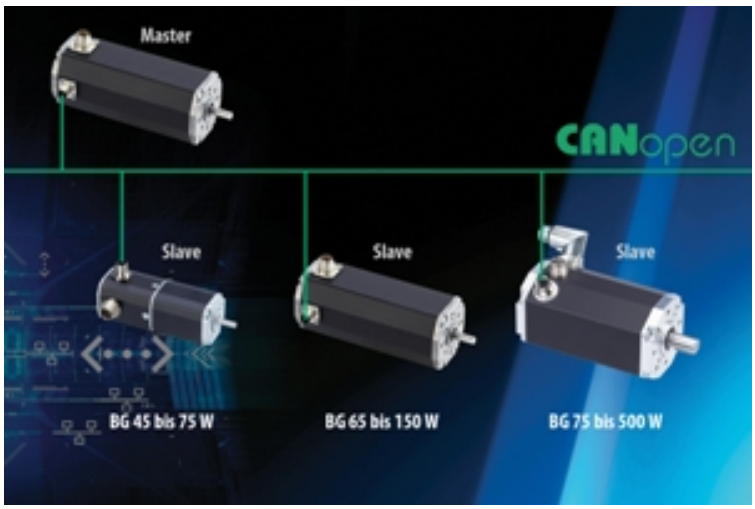

Integral control brushless motor functioning as master to integral control slave motors in CANopen network

Integrated Positioning Control
These motors can close a position loop. Initially, GUI selection of the mode of operation (analog or digital torque or speed control and relative, absolute, and/or modulo position control) is set and the parameters downloaded to the motor. Once parameterized, it runs as a stand-alone, programmed servo that interfaces to the rest of the equipment via digital and analog IO.
Integrated Master Electronics
These motors have the ability to be a master in a network of several other motors. Like the integrated positioning control motor, it requires no higher level controller, however, it is not limited to standard operating modules, is freely programmable to the application needs, and can close current, velocity, and position loops or control slave node motors.

Integrated CANopen Electronics
Follows the trend in machine and medical equipment design to use distributed control of not only IO devices, but motors as well and functions as a single node on a Controller Area Network of up to 126 motors. The ability to access each motor's IO through the CAN network may eliminate the need for separate IO modules and/or PLC altogether.

Integrated Profibus Electronics
Similar to the CANopen version noted above but functions as a slave on a Profibus DP network.

Integrated EtherCAT Electronics
These motors are designed to be a slave on an EtherCAT network and CANopen over Ethernet (CoE) is supported.

Conclusion
Brushless motors with integral controls are in use today in a wide variety of medical devices, from the most sophisticated multi-axes whole body diagnostic devices to peristaltic pumps, as well as in laboratory automation and home healthcare equipment. The continuing improvement in the capabilities and performance of integral control brushless servo motors allow design engineers to better concentrate their efforts on improving the performance inherent in what their own devices deliver.

With over 30 years experience in the technology transfer, product development, and motion control fields, John Morehead is vice president, business development for the North American operations of Dunkermotoren GmbH *[1], a 60-year-old electric motor manufacturer that was one of the pioneer developers of integrated control brushless motors (iBLDC).*

Source URL (retrieved on *03/10/2014 - 4:17am*):
http://www.mdtmag.com/articles/2012/06/brushless-motors-integral-motion-controls-benefit-medical-product-development

Links:
[1] http://www.dunkermotor.com/