Fully Configurable CAD Model Downloads for SplineRail Linear Actuator Systems

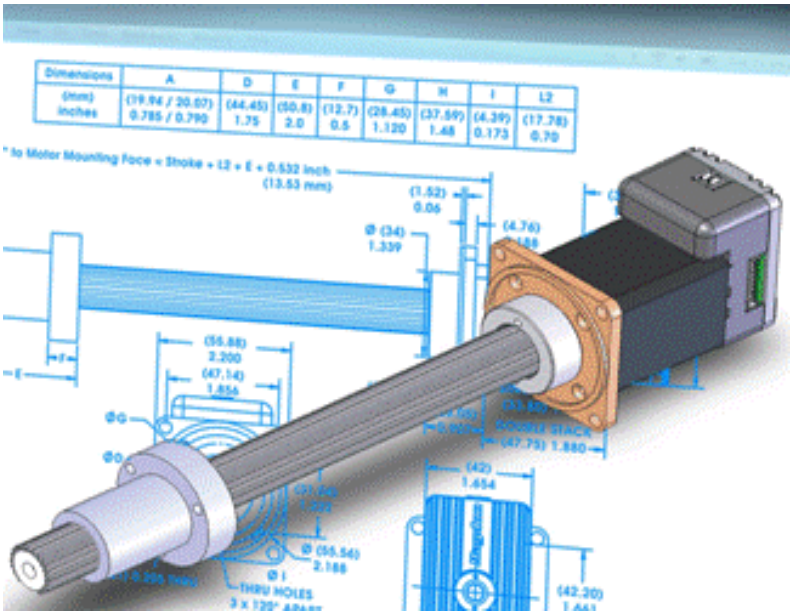

Haydon Kerk Motion Solutions, a premier manufacturer of engineered linear motion products, offers customers the ability to configure and download CAD models of its newest linear actuator product, the SplineRail.

CAD download availability includes both motorized and non-motorized SplineRails, and offers the flexibility to modify such features such as linear actuator length, screw resolution, motor step angle, motor voltage, and other design parameters.

Once configured, the SplineRail 3D model can be downloaded using a choice of almost 30 file formats, including those compatible with the most popular engineering and design software. A fully dimensioned 2D outline drawing also can be downloaded from the system after creating the 3D part.

Beyond the choice of options through the online CAD download system, Haydon Kerk also is able to further customize any part for application-specific needs. In addition, users can add an optional IDEA integrated programmable drive system to any SplineRail configuration.

The SplineRail technology utilizes a Kerk precision rolled lead screw, supported by bearings and contained within a concentric aluminum spline, driving an integrated Kerkite composite polymer nut/bushing. The extruded aluminum spline offers excellent torsional stability. KerKote TFE coating and self-lubricating Kerkite nut/bushing materials ensure long life and zero maintenance.

The SplineRail combines mechanical drive, guidance, and an optional stepper motor and programmable drive in a single, compact component. Typical applications include pick-and-place mechanisms and robotic assemblies in life sciences

instrumentation, semiconductor equipment, business machines, packaging and assembly, and a wide range of factory automation applications.

Combined with Haydon Kerk's broad offering of motion control components, the SplineRail is one more product in the Haydon Kerk "linear motion toolbox," allowing the creation of more complex custom motion systems.

For more product information and CAD links, visit www.HaydonKerk.com [1] or speak with an engineer to discuss a specific application by contacting Haydon Kerk at 203-756-7441.

Source URL (retrieved on *05/25/2013 - 12:59am*):
http://www.mdtmag.com/product-releases/2011/08/fully-configurable-cad-model-downloads-splinerail-linear-actuator-systems?qt-video_of_the_day=0

Links:
[1] http://www.HaydonKerk.com